ELECTROLUX HOME PRODUCTS PTY LTD

ABN 51 004 762 341

| | |
|---|---|
| Technical Publication Nº RE1061 | Issue: 1<br>Date: 3/2019 |

# Electrolux

## "B" SERIES
## Electronic
## French Door
## Ice & Water

*MODEL:*
EHE5267SB-D
PNC: 925060426
EHE5267SB-D
PNC: 925060431

© Copyright 2019 ELECTROLUX HOME PRODUCTS PTY LTD Technical Services

Classified as Internal

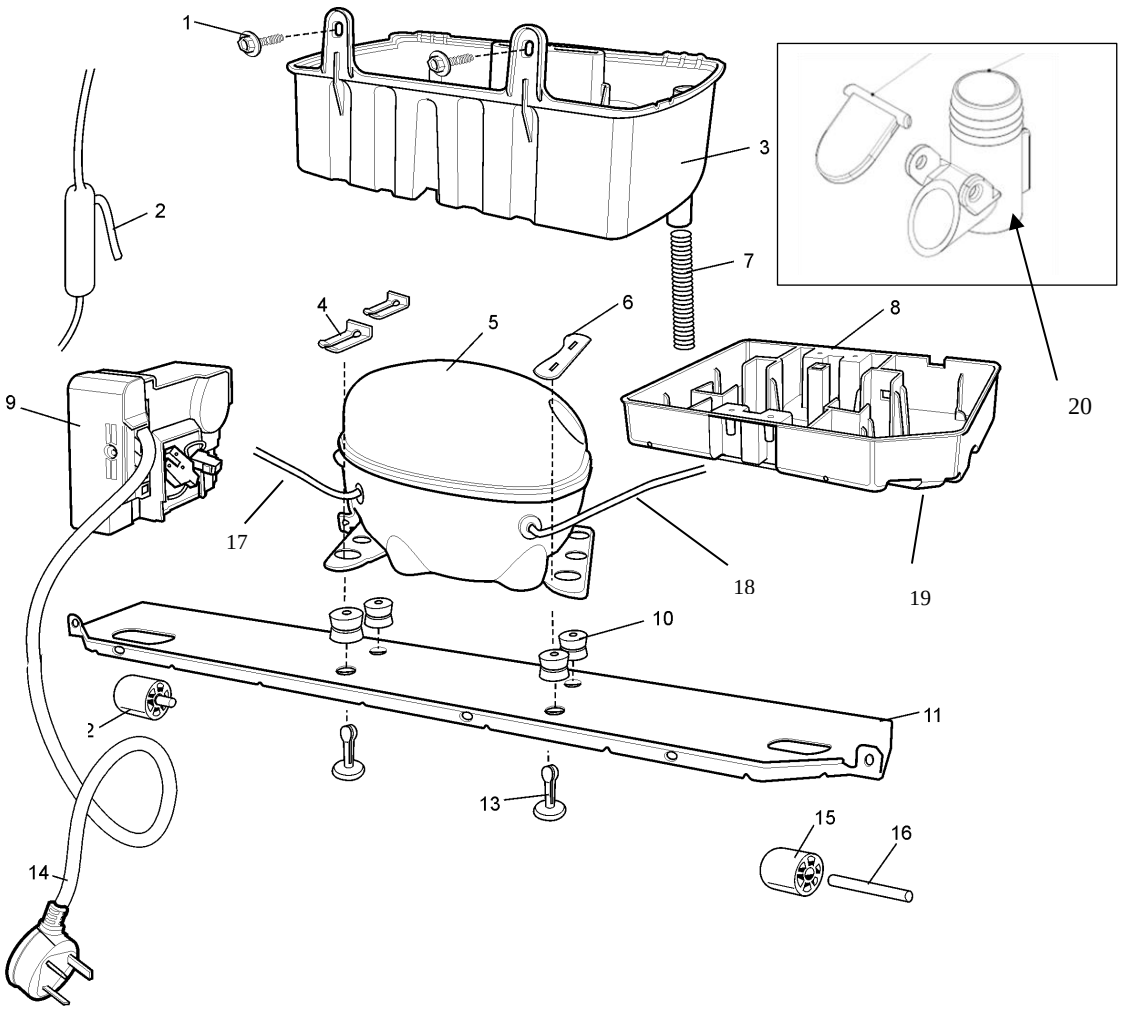




Classified as Internal

**MODEL: EHE5267**

**EX. VIEW DRAWING 8385**
**DOOR ASSY;**

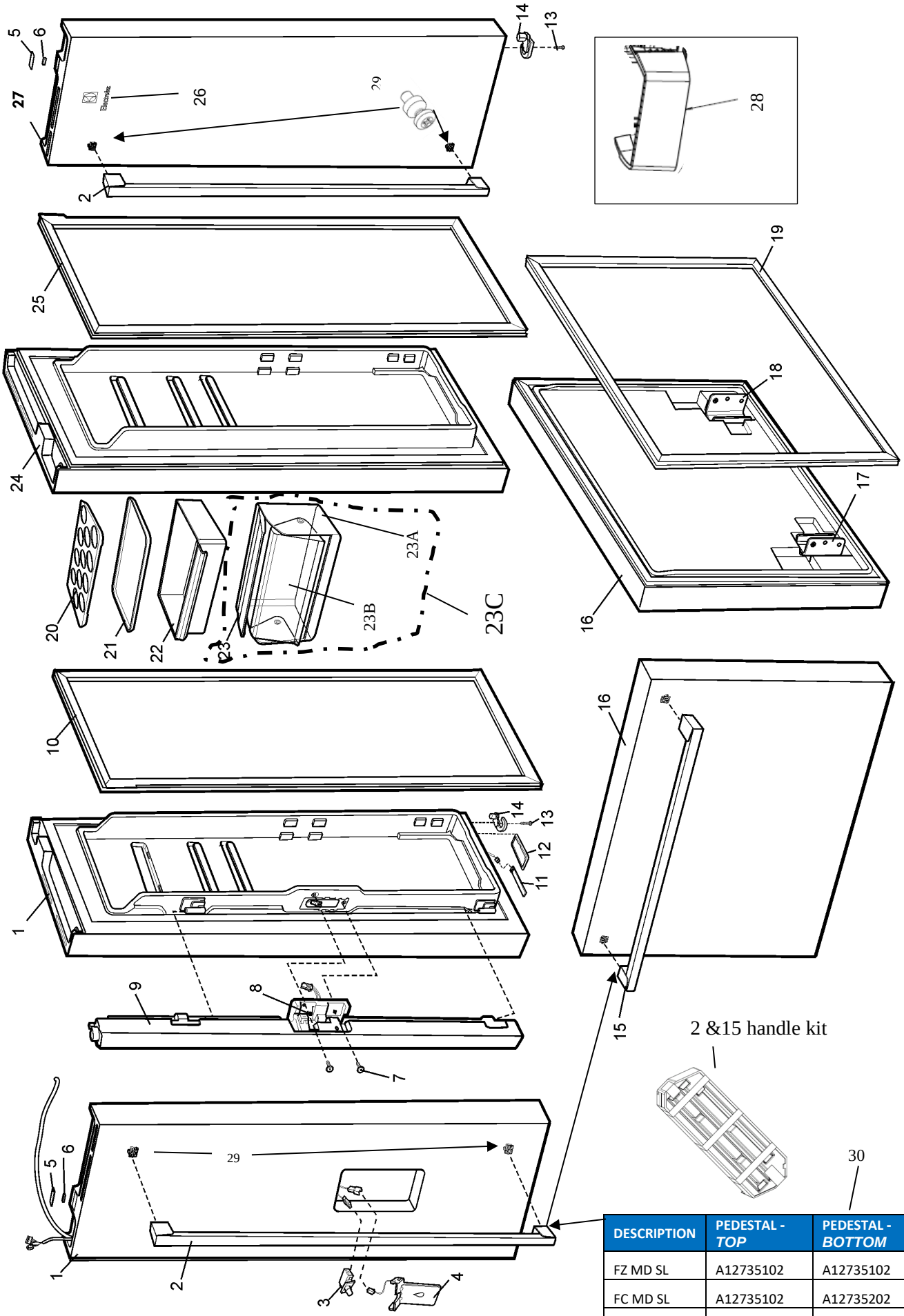


| DESCRIPTION | PEDESTAL - *TOP* | PEDESTAL - *BOTTOM* |
|---|---|---|
| FZ MD SL | A12735102 | A12735102 |
| FC MD SL | A12735102 | A12735202 |
| FZ MD BK | A12735101 | A12735101 |
| FC MD BK | A12735101 | A12735201 |



Classified as Internal

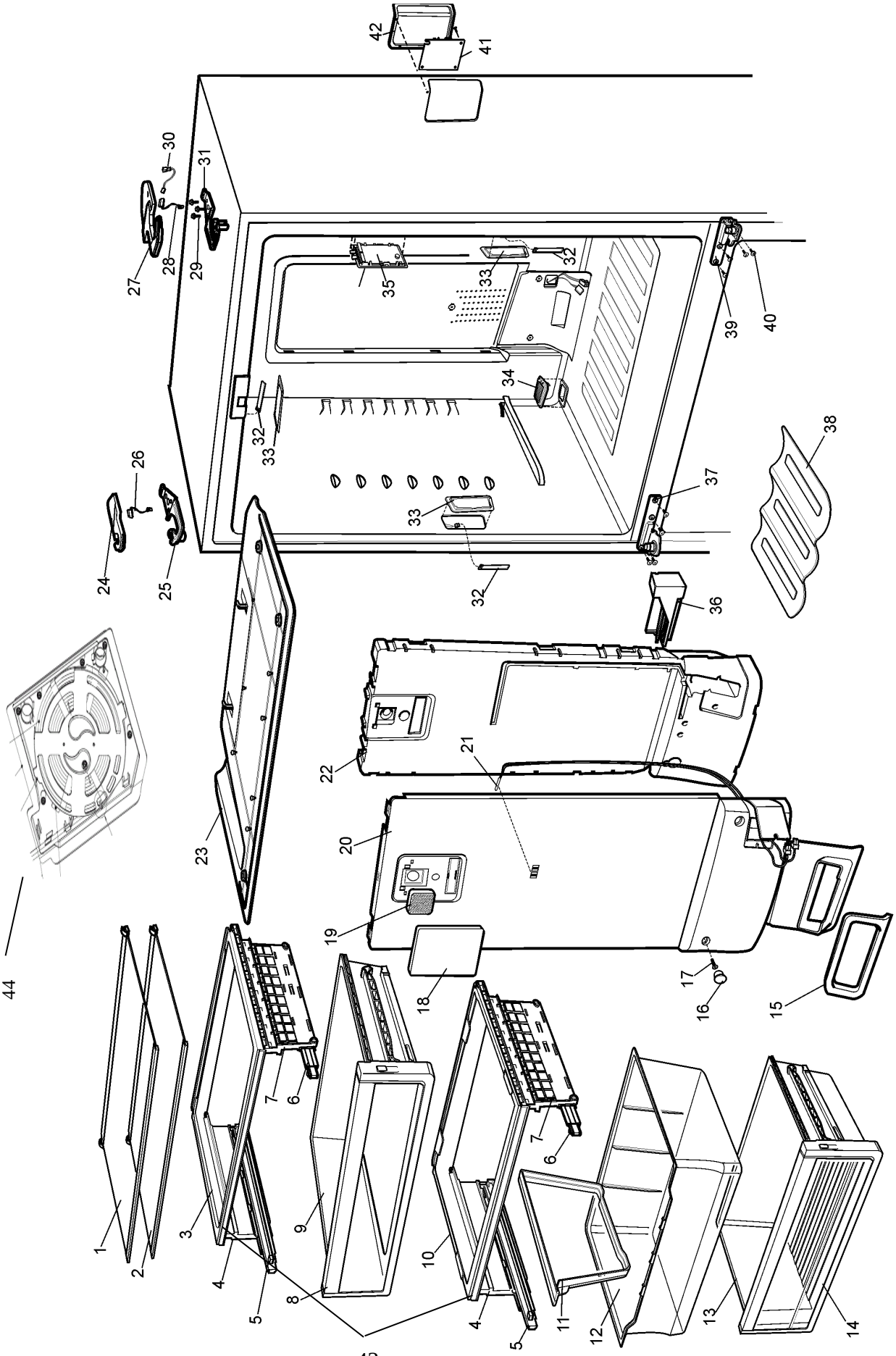




Classified as Internal

**MODEL EHE5267**

**EX VIEW DRAWING 8388**
**FREEZER CAB ASSY;**

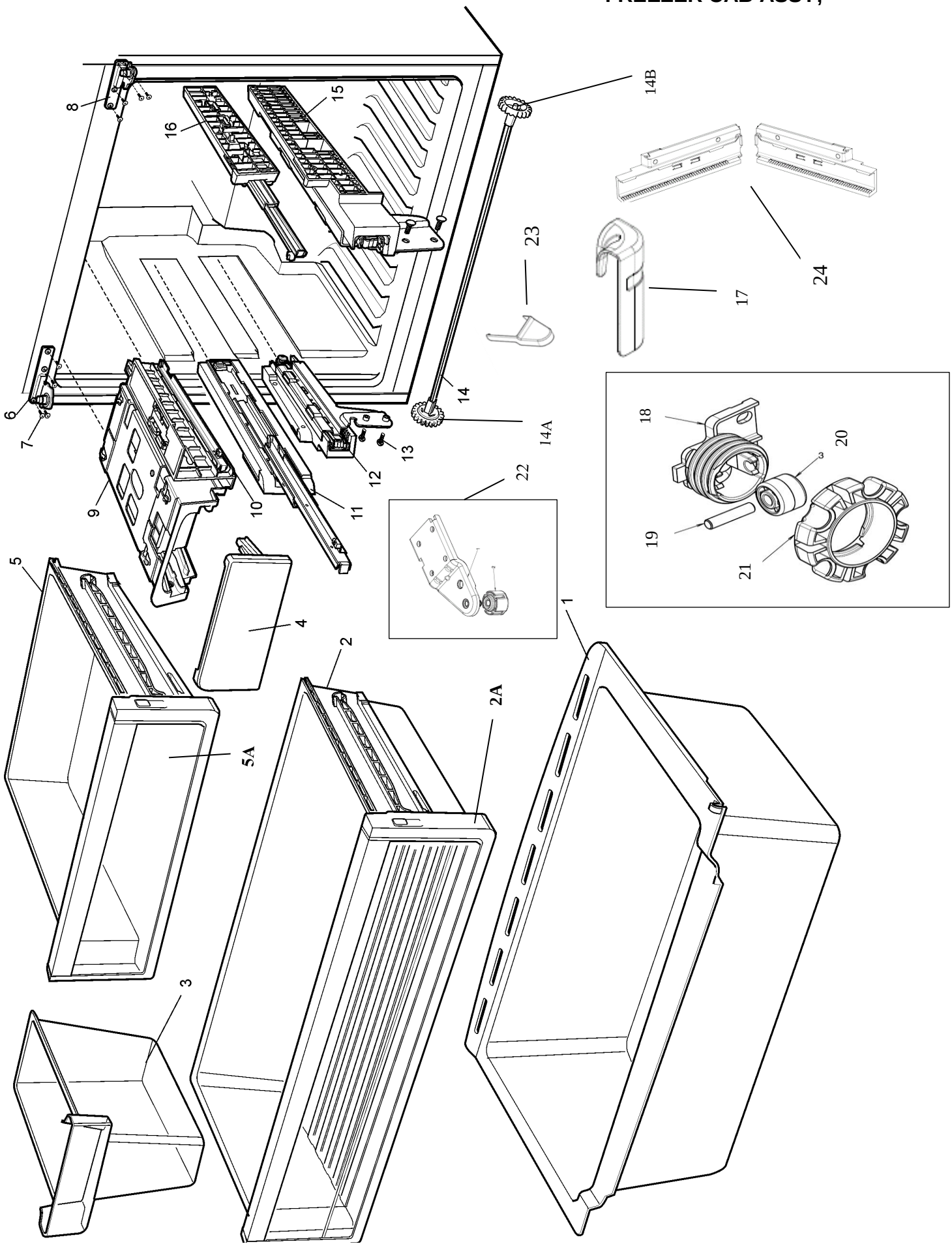




Classified as Internal

**MODEL EHE5267**

**EX. VIEW DRAWING 8389**
**FREEZER ASSY;**

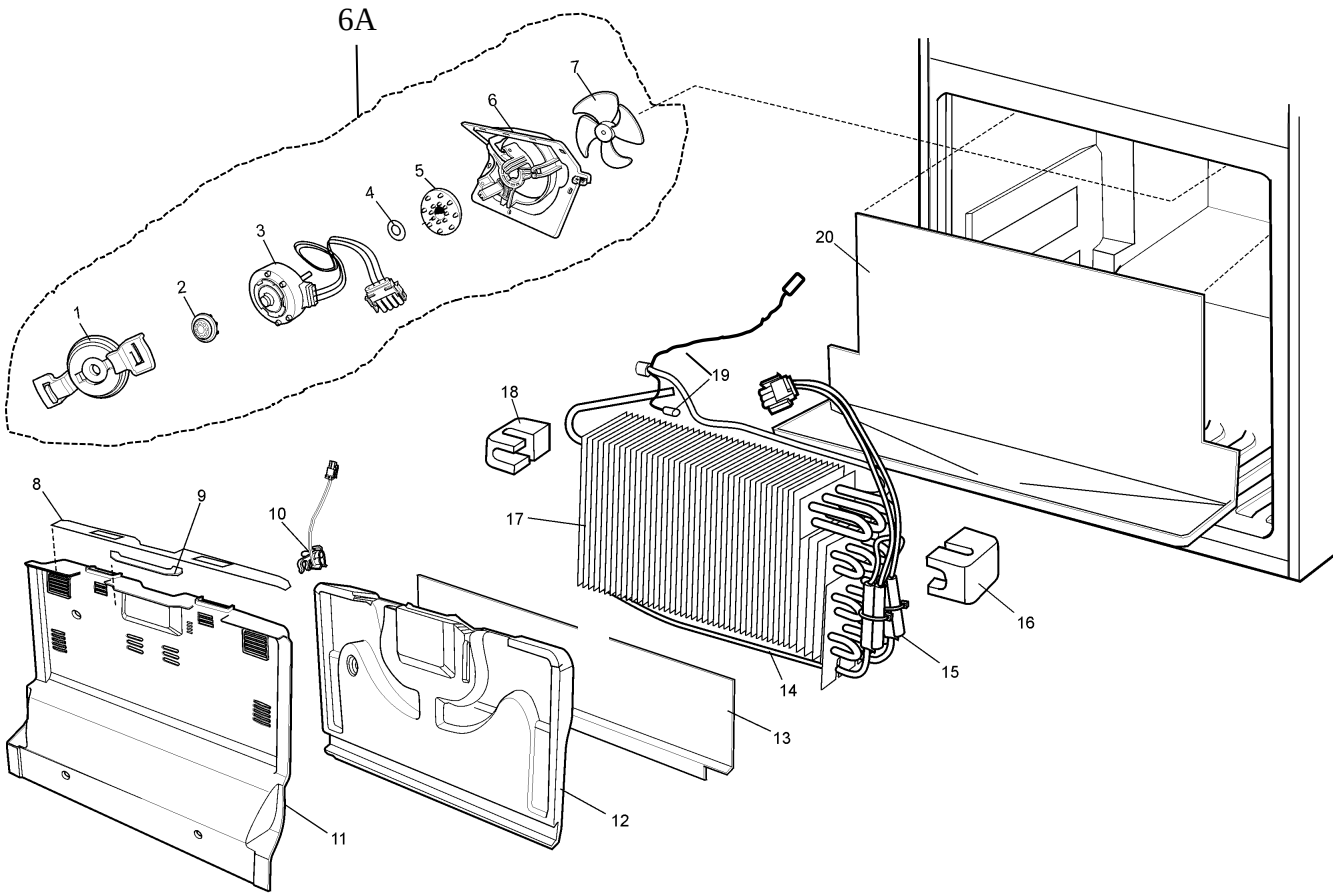




Classified as Internal

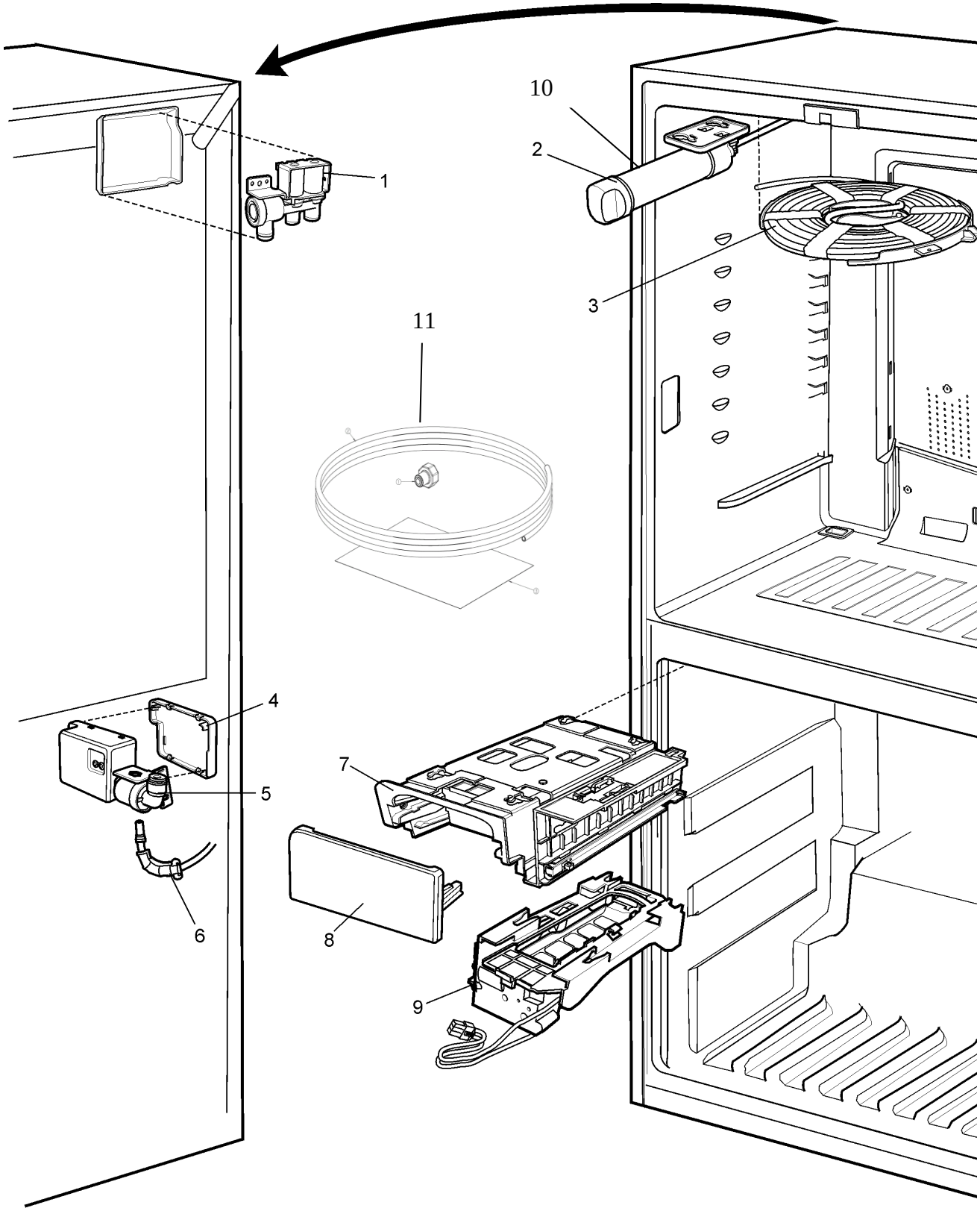




Classified as Internal